TPS3803−01
TPS3803G15
TPS3805H33

SLVS392A − JULY 2001 − REVISED JUNE 2007

VOLTAGE DETECTOR

FEATURES

- **Single Voltage Detector (TPS3803): Adjustable/1.5 V**
- **Dual Voltage Detector (TPS3805): Adjustable/3.3 V**
- **High ±1.5% Threshold Voltage Accuracy**
- **Supply Current: 3 µA Typical at V_{DD} = 3.3 V**
- **Push/Pull Reset Output (TPS3805) Open-Drain Reset Output (TPS3803)**
- **Temperature Range: −40°C to +85°C**
- **5-Pin SC−70 Package**

APPLICATIONS

- **Applications Using DSPs, Microcontrollers, or Microprocessors**
- **Wireless Communication Systems**
- **Portable/Battery-Powered Equipment**
- **Programmable Controls**
- **Intelligent Instruments**
- **Industrial Equipment**
- **Notebook/Desktop Computers**
- **Automotive Systems**

DESCRIPTION

The TPS3803 and TPS3805 families of supervisory circuits provide circuit initialization and timing supervision, primarily for DSPs and processor-based systems.

The TPS3803G15 device has a fixed-sense threshold voltage V_{IT} set by an internal voltage divider, whereas the TPS3803−01 has an adjustable SENSE input that can be configured by two external resistors. In addition to the fixed sense threshold monitored at V_{DD}, the TPS3805 devices provide a second adjustable SENSE input. $\overline{\text{RESET}}$ is asserted in case any of the two voltages drops below V_{IT}.

During power on, $\overline{\text{RESET}}$ is asserted when supply voltage V_{DD} becomes higher than 0.8 V. Thereafter, the supervisory circuit monitors V_{DD} (and/or SENSE) and keeps $\overline{\text{RESET}}$ active as long as V_{DD} or SENSE remains below the threshold voltage V_{IT}. As soon as V_{DD} (SENSE) rises above the threshold voltage V_{IT}, $\overline{\text{RESET}}$ is deasserted again. The product spectrum is designed for 1.5 V, 3.3 V, and adjustable supply voltages. The devices are available in a 5-pin SC-70 package. The TPS3803 and TPS3805 devices are characterized for operation over a temperature range of −40°C to +85°C.

DCK PACKAGE
(Top View)
TPS3803-01, TPS3803G15, TPS3805

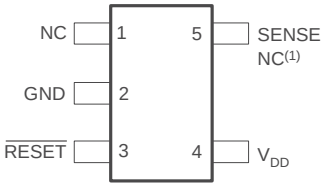

(1) NC = No Connection on **TPS3803G15**

Typical Operating Circuit

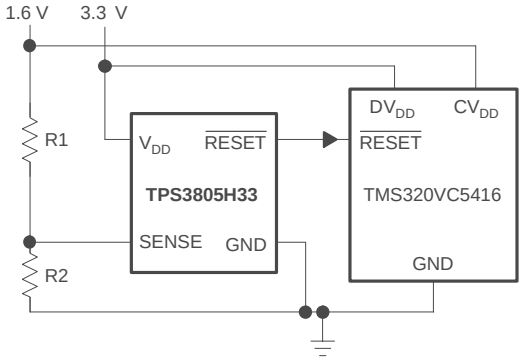

Please be aware that an important notice concerning availability, standard warranty, and use in critical applications of Texas Instruments semiconductor products and disclaimers thereto appears at the end of this data sheet.

All trademarks are the property of their respective owners.

PRODUCTION DATA information is current as of publication date. Products conform to specifications per the terms of Texas Instruments standard warranty. Production processing does not necessarily include testing of all parameters.

Copyright © 2001−2007, Texas Instruments Incorporated

This integrated circuit can be damaged by ESD. Texas Instruments recommends that all integrated circuits be handled with appropriate precautions. Failure to observe proper handling and installation procedures can cause damage.

ESD damage can range from subtle performance degradation to complete device failure. Precision integrated circuits may be more susceptible to damage because very small parametric changes could cause the device not to meet its published specifications.

PACKAGE INFORMATION

T_A	DEVICE NAME	THRESHOLD VOLTAGE		MARKING
		V_{DD}	SENSE	
−40°C to +85°C	TPS3803−01DCKR(1)	NA	1.226 V	AWG
	TPS3803G15DCKR(1)	1.40 V	NA	AWI
	TPS3805H33DCKR(1)	3.05 V	1.226 V	AWK

(1) The DCKR passive indicates tape and reel containing 3000 parts.

ORDERING INFORMATION

TPS380 3 G 15 DCK R

- R — Reel
- DCK — Package
- 15 — Nominal Supply Voltage
- G — Nominal Threshold Voltage
- 3 — Functionality
- TPS380 — Family

Function/Truth Tables

TPS3803-01		TPS3803G15	
SENSE > V_{IT}	$\overline{RESET}$	$V_{DD} > V_{IT}$	$\overline{RESET}$
0	L	0	L
1	H	1	H

TPS3805H33		
$V_{DD} > V_{IT}$	SENSE > V_{IT}	$\overline{RESET}$
0	0	L
0	1	L
1	0	L
1	1	H

FUNCTIONAL BLOCK DIAGRAM

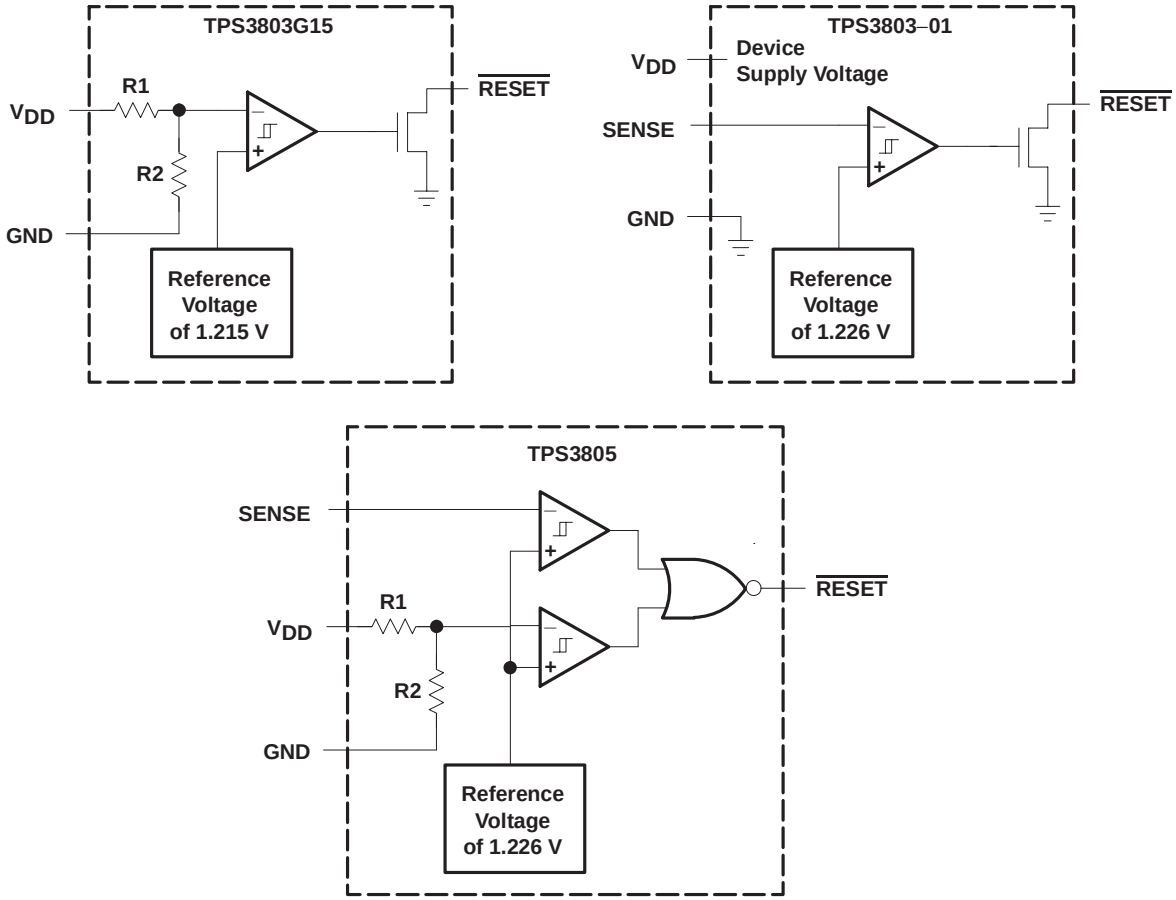

TIMING REQUIREMENTS

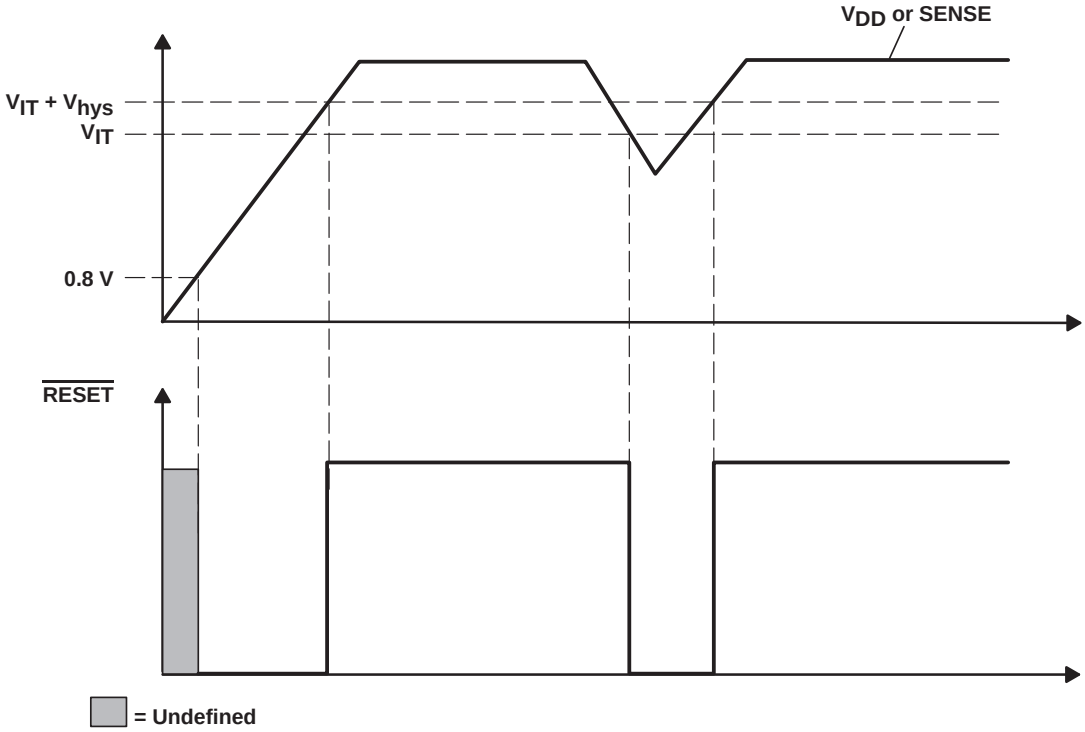

Terminal Functions

TERMINAL NAME	TERMINAL NO.	I/O	DESCRIPTION
GND	2	I	Ground
$\overline{\text{RESET}}$	3	O	Active-low reset output (TPS3803—open−drain, TPS3805—push/pull)
SENSE	5	I	Adjustable sense input
NC	1		No internal connection
NC (TPS3803G15)	5		No internal connection
V_{DD}	4	I	Input supply voltage, fixed sense input for TPS3803G15 and TPS3805

ABSOLUTE MAXIMUM RATINGS[1]

Over operating free-air temperature range, unless otherwise noted.

Supply voltage, V_{DD}[2]	+7 V
All other pins[2]	−0.3 V to +7 V
Maximum low-output current, I_{OL}	+5 mA
Maximum high-output current, I_{OH}	−5 mA
Input clamp current, I_{IK} ($V_I < 0$ or $V_I > V_{DD}$)	±10 mA
Output clamp current, I_{OK} ($V_O < 0$ or $V_O > V_{DD}$)	±10 mA
Continuous total power dissipation	See Dissipation Rating Table
Operating free-air temperature range, T_A	−40°C to +85°C
Storage temperature range, T_{stg}	−65°C to +150°C
Soldering temperature	+260°C

(1) Stresses beyond those listed under “absolute maximum ratings” may cause permanent damage to the device. These are stress ratings only, and functional operation of the device at these or any other conditions beyond those indicated under “recommended operating conditions” is not implied. Exposure to absolute−maximum−rated conditions for extended periods may affect device reliability.

(2) All voltage values are with respect to GND. For reliable operation the device should not be continuously operated at 7 V for more than t = 1000 h.

DISSIPATION RATING TABLE

PACKAGE	T_A < +25°C POWER RATING	DERATING FACTOR ABOVE T_A = +25°C	T_A = +70°C POWER RATING	T_A = +85°C POWER RATING
DCK	321 mW	2.6 mW/°C	206 mW	167 mW

RECOMMENDED OPERATING CONDITIONS

	MIN	MAX	UNIT
Supply voltage, V_{DD}	1.3	6	V
Input voltage, V_I	0	V_{DD} + 0.3	V
Operating free-air temperature range, T_A	−40	85	°C

ELECTRICAL CHARACTERISTICS

Over recommended operating free-air temperature range, unless otherwise noted.

PARAMETER			TEST CONDITIONS	MIN	TYP	MAX	UNIT
V_{OH}	High-level output voltage (TPS3805 only)		V_{DD} = 1.5 V, I_{OH} = −0.5 mA	0.8 x V_{DD}			V
			V_{DD} = 3.3 V, I_{OH} = −1.0 mA				
			V_{DD} = 6 V, I_{OH} = −1.5 mA				
V_{OL}	Low-level output voltage		V_{DD} = 1.5 V, I_{OL} = 1.0 mA			0.3	V
			V_{DD} = 3.3 V, I_{OL} = 2 mA				
			V_{DD} = 6 V, I_{OL} = 3 mA				
	Power-up reset voltage(1)	V_{IT} > 1.5 V, T_A = 25°C		0.8			V
		V_{IT} ≤ 1.5 V, T_A = 25°C		1.0			V
V_{IT}	Negative-going input threshold voltage(2)	SENSE	T_A = −40°C to +85°C	1.208	1.226	1.244	V
		TPS3803G15		1.379	1.4	1.421	
		TPS3805H33		3.004	3.05	3.096	
V_{hys}	Hysteresis		1.2 V < V_{IT} < 2.5 V		15		mV
			2.5 V < V_{IT} < 3.5 V		30		
I_I	Input current	SENSE		−25		25	nA
I_{OH}	High-level output current at $\overline{RESET}$	Open drain only	V_{DD} = V_{IT} + 0.2V, V_{OH} = V_{DD}			300	nA
I_{DD}	Supply current	TPS3803−01	V_{DD} = 3.3 V, output unconnected		2	4	µA
		TPS3805, TPS3803G15			3	5	
		TPS3803−01	V_{DD} = 6 V, output unconnected		2	4	
		TPS3805, TPS3803G15			4	6	
C_I	Input capacitance		V_I = 0 V to V_{DD}		1		pF

(1) The lowest supply voltage at which $\overline{RESET}$ (V_{OL}(max) = 0.2 V, I_{OL} = 50 µA) becomes active. $t_{r(VDD)}$ ≥ 15 µs/V.
(2) To ensure the best stability of the threshold voltage, place a bypass capacitor (ceramic, 0.1 µF) near the supply terminals.

TIMING REQUIREMENTS

AT R_L = 1 MΩ, C_L = 50 PF, T_A = −40°C TO +85°C.

PARAMETER			TEST CONDITIONS	MIN	TYP	MAX	UNIT
t_w	Pulse width	At V_{DD}	V_{IH} = 1.05 x V_{IT}, V_{IL} = 0.95 x V_{IT}	5.5			µs
		At SENSE					

SWITCHING CHARACTERISTICS

AT R_L = 1 MΩ, C_L = 50 PF, T_A = −40°C TO +85°C.

PARAMETER			TEST CONDITIONS	MIN	TYP	MAX	UNIT
t_{PHL}	Propagation (delay) time, high-to-low-level output	V_{DD} to $\overline{RESET}$ delay	V_{IH} = 1.05 x V_{IT}, V_{IL} = 0.95 x V_{IT}		5	100	µs
		SENSE to $\overline{RESET}$ delay					
t_{PLH}	Propagation (delay) time, low-to-high-level output	V_{DD} to $\overline{RESET}$ delay			5	100	
		SENSE to $\overline{RESET}$ delay					

TYPICAL CHARACTERISTICS

TPS3805H33
SUPPLY CURRENT
vs
SUPPLY VOLTAGE

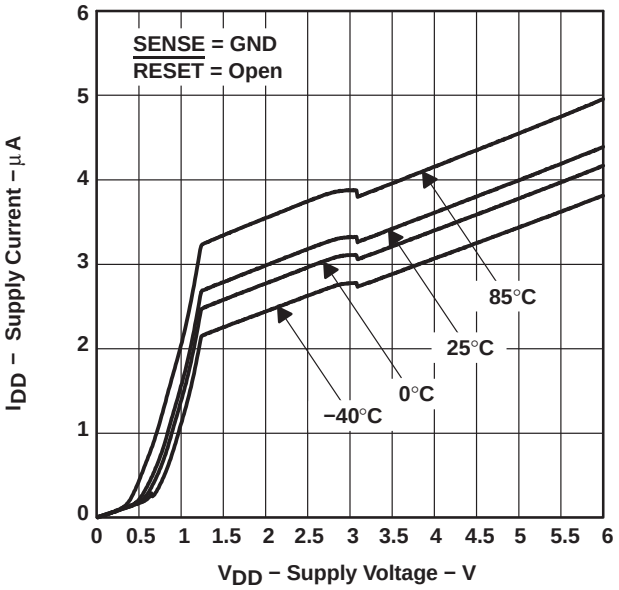

Figure 1

TPS3803−01
SUPPLY CURRENT
vs
SUPPLY VOLTAGE

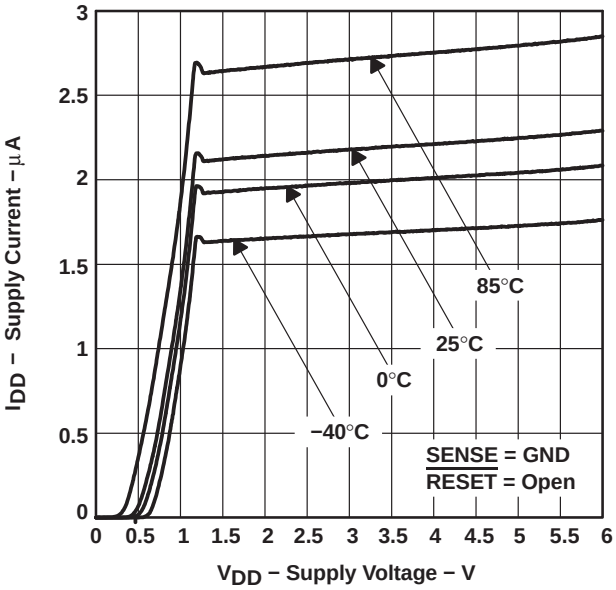

Figure 2

LOW-LEVEL OUTPUT VOLTAGE
vs
LOW-LEVEL OUTPUT CURRENT

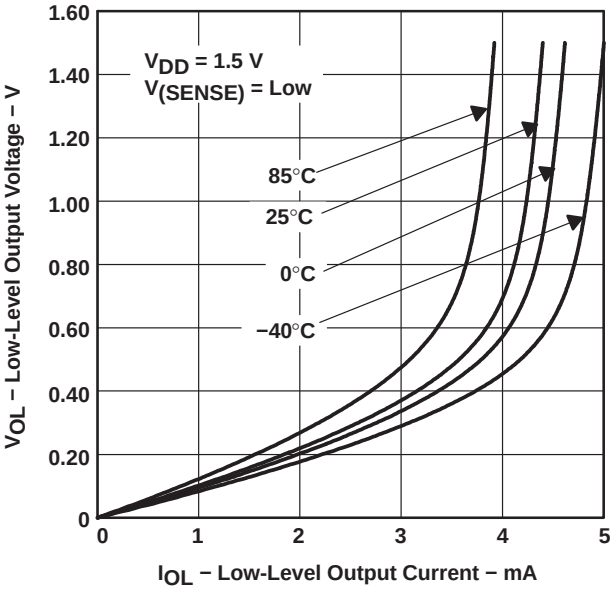

Figure 3

LOW-LEVEL OUTPUT VOLTAGE
vs
LOW-LEVEL OUTPUT CURRENT

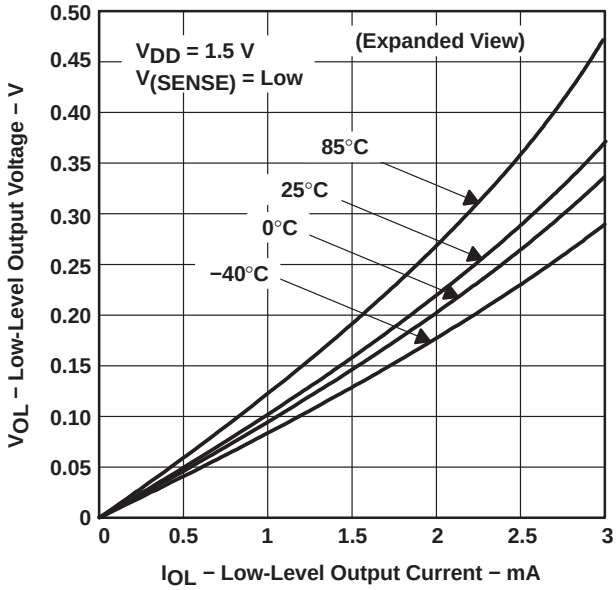

Figure 4

TYPICAL CHARACTERISTICS (continued)

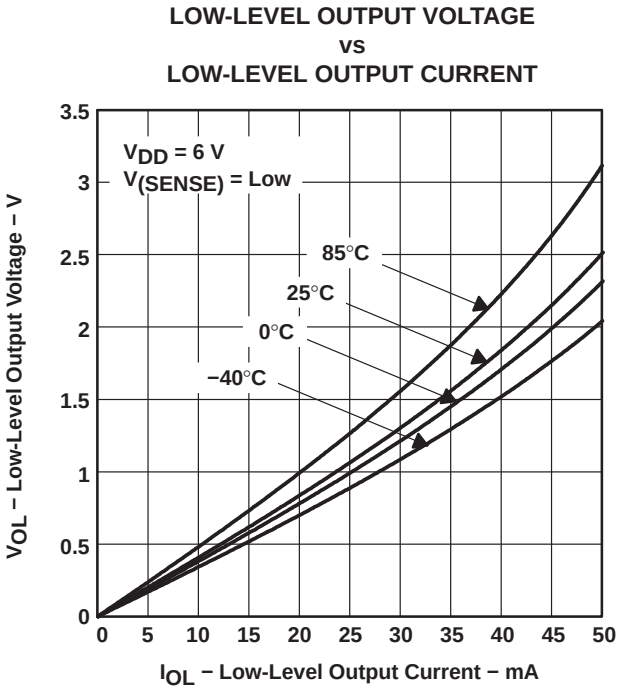

Figure 5

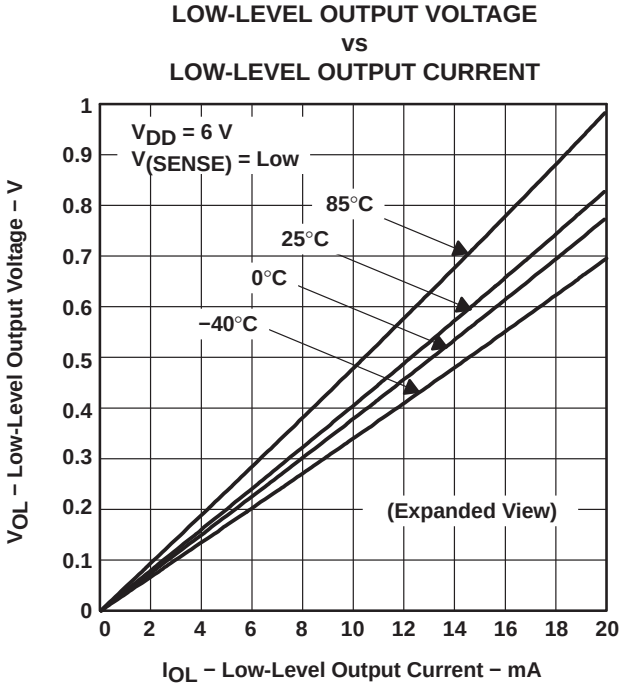

Figure 6

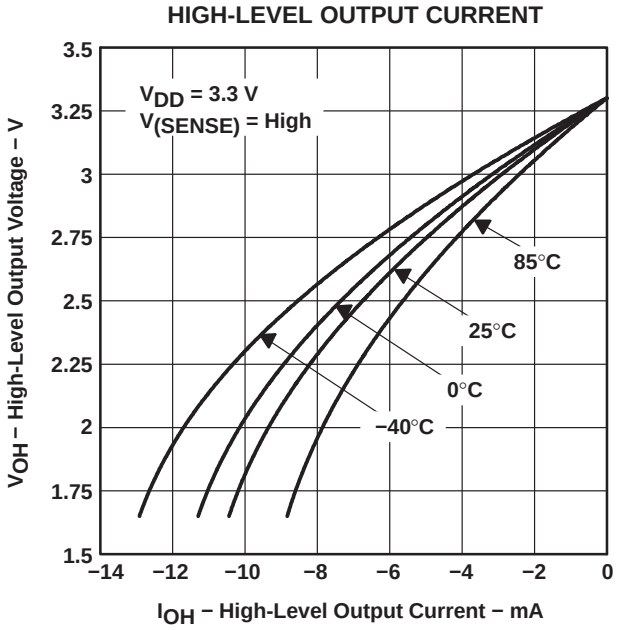

Figure 7

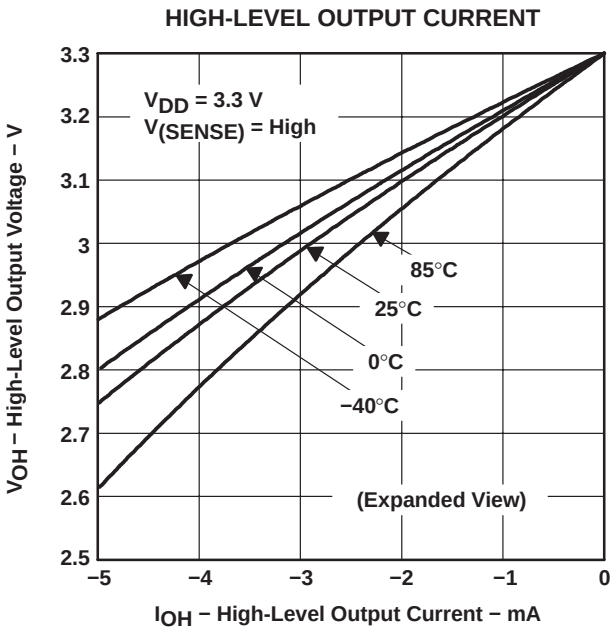

Figure 8

TYPICAL CHARACTERISTICS (continued)

TPS3805H33
HIGH-LEVEL OUTPUT VOLTAGE
vs
HIGH-LEVEL OUTPUT CURRENT

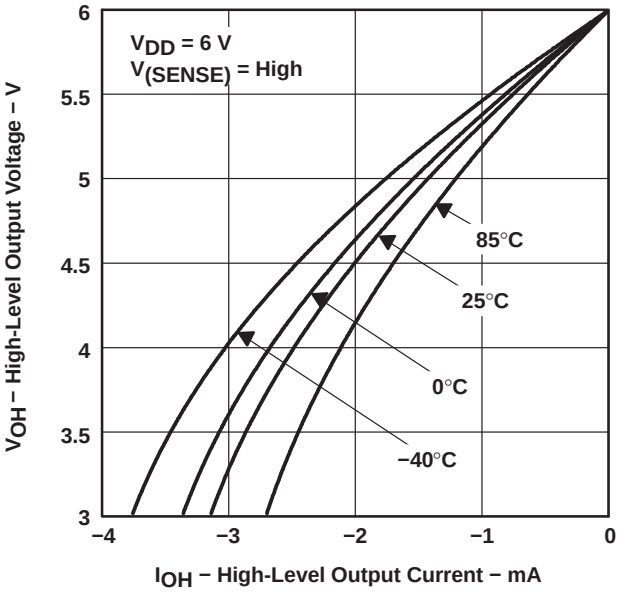

Figure 9

TPS3805H33
HIGH-LEVEL OUTPUT VOLTAGE
vs
HIGH-LEVEL OUTPUT CURRENT

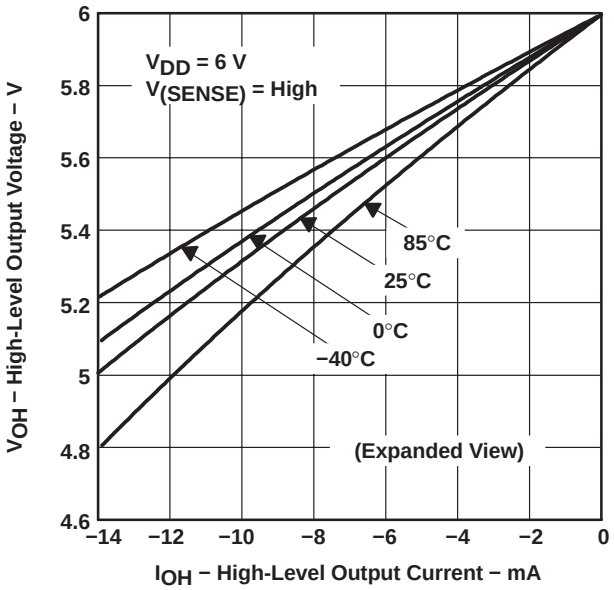

Figure 10

TPS3803−01
NORMALIZED INPUT THRESHOLD VOLTAGE
vs
FREE-AIR TEMPERATURE AT SENSE

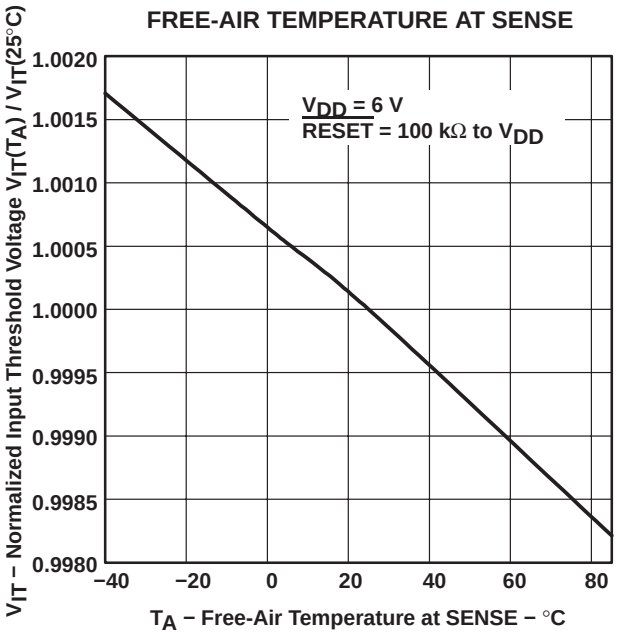

Figure 11

MINIMUM PULSE DURATION AT V_{DD}
vs
V_{DD} THRESHOLD OVERDRIVE VOLTAGE

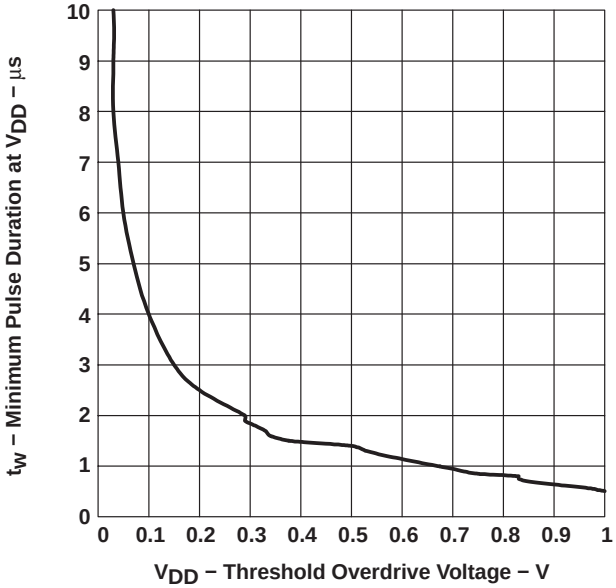

Figure 12

TYPICAL CHARACTERISTICS (continued)

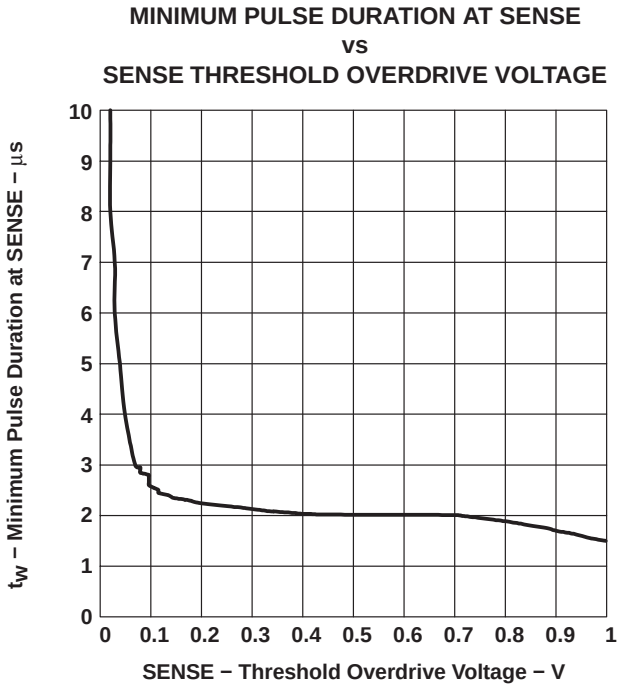

Figure 13

Revision History

DATE	REV	PAGE	SECTION	DESCRIPTION
6/07	A	Front Page	—	Updated front page.
		3	—	Functional block diagram change.

NOTE: Page numbers for previous revisions may differ from page numbers in the current version.

PACKAGING INFORMATION

Orderable Device	Status (1)	Package Type	Package Drawing	Pins	Package Qty	Eco Plan (2)	Lead finish/ Ball material (6)	MSL Peak Temp (3)	Op Temp (°C)	Device Marking (4/5)	Samples
TPS3803-01DCKR	ACTIVE	SC70	DCK	5	3000	RoHS & Green	NIPDAU | NIPDAUAG	Level-1-260C-UNLIM	-40 to 85	AWG	Samples
TPS3803G15DCKR	ACTIVE	SC70	DCK	5	3000	RoHS & Green	NIPDAUAG	Level-1-260C-UNLIM		AWI	Samples
TPS3805H33DCKR	ACTIVE	SC70	DCK	5	3000	RoHS & Green	NIPDAU | NIPDAUAG	Level-1-260C-UNLIM	-40 to 85	AWK	Samples
TPS3805H33DCKRG4	ACTIVE	SC70	DCK	5	3000	TBD	Call TI	Call TI	-40 to 85		Samples

(1) The marketing status values are defined as follows:
ACTIVE: Product device recommended for new designs.
LIFEBUY: TI has announced that the device will be discontinued, and a lifetime-buy period is in effect.
NRND: Not recommended for new designs. Device is in production to support existing customers, but TI does not recommend using this part in a new design.
PREVIEW: Device has been announced but is not in production. Samples may or may not be available.
OBSOLETE: TI has discontinued the production of the device.

(2) **RoHS:** TI defines "RoHS" to mean semiconductor products that are compliant with the current EU RoHS requirements for all 10 RoHS substances, including the requirement that RoHS substance do not exceed 0.1% by weight in homogeneous materials. Where designed to be soldered at high temperatures, "RoHS" products are suitable for use in specified lead-free processes. TI may reference these types of products as "Pb-Free".
RoHS Exempt: TI defines "RoHS Exempt" to mean products that contain lead but are compliant with EU RoHS pursuant to a specific EU RoHS exemption.
Green: TI defines "Green" to mean the content of Chlorine (Cl) and Bromine (Br) based flame retardants meet JS709B low halogen requirements of <=1000ppm threshold. Antimony trioxide based flame retardants must also meet the <=1000ppm threshold requirement.

(3) MSL, Peak Temp. - The Moisture Sensitivity Level rating according to the JEDEC industry standard classifications, and peak solder temperature.

(4) There may be additional marking, which relates to the logo, the lot trace code information, or the environmental category on the device.

(5) Multiple Device Markings will be inside parentheses. Only one Device Marking contained in parentheses and separated by a "~" will appear on a device. If a line is indented then it is a continuation of the previous line and the two combined represent the entire Device Marking for that device.

(6) Lead finish/Ball material - Orderable Devices may have multiple material finish options. Finish options are separated by a vertical ruled line. Lead finish/Ball material values may wrap to two lines if the finish value exceeds the maximum column width.

Important Information and Disclaimer: The information provided on this page represents TI's knowledge and belief as of the date that it is provided. TI bases its knowledge and belief on information provided by third parties, and makes no representation or warranty as to the accuracy of such information. Efforts are underway to better integrate information from third parties. TI has taken and

continues to take reasonable steps to provide representative and accurate information but may not have conducted destructive testing or chemical analysis on incoming materials and chemicals.
TI and TI suppliers consider certain information to be proprietary, and thus CAS numbers and other limited information may not be available for release.

In no event shall TI's liability arising out of such information exceed the total purchase price of the TI part(s) at issue in this document sold by TI to Customer on an annual basis.

OTHER QUALIFIED VERSIONS OF TPS3803, TPS3805H33 :

- Automotive : TPS3803-Q1, TPS3805H33-Q1
- Enhanced Product : TPS3803-EP, TPS3805H33-EP

NOTE: Qualified Version Definitions:

- Automotive - Q100 devices qualified for high-reliability automotive applications targeting zero defects
- Enhanced Product - Supports Defense, Aerospace and Medical Applications

TAPE AND REEL INFORMATION

REEL DIMENSIONS

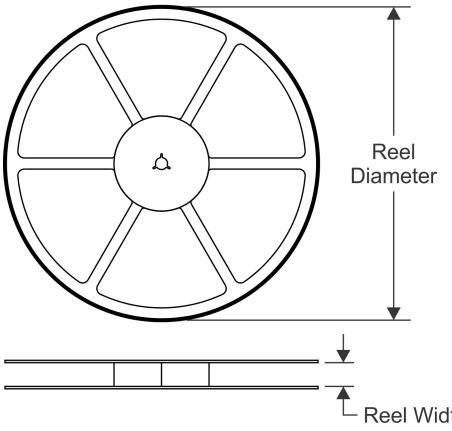

TAPE DIMENSIONS

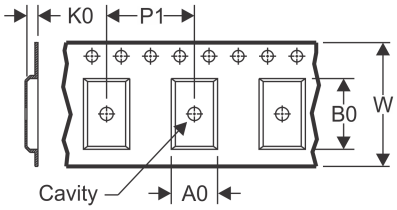

A0	Dimension designed to accommodate the component width
B0	Dimension designed to accommodate the component length
K0	Dimension designed to accommodate the component thickness
W	Overall width of the carrier tape
P1	Pitch between successive cavity centers

QUADRANT ASSIGNMENTS FOR PIN 1 ORIENTATION IN TAPE

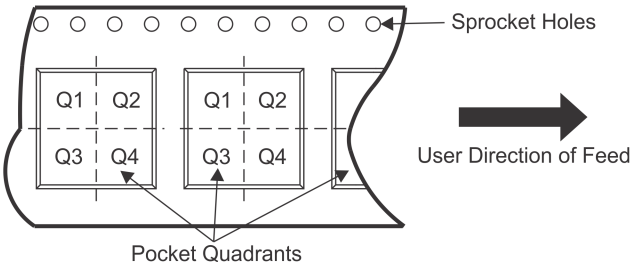

*All dimensions are nominal

Device	Package Type	Package Drawing	Pins	SPQ	Reel Diameter (mm)	Reel Width W1 (mm)	A0 (mm)	B0 (mm)	K0 (mm)	P1 (mm)	W (mm)	Pin1 Quadrant
TPS3803-01DCKR	SC70	DCK	5	3000	180.0	8.4	2.41	2.41	1.2	4.0	8.0	Q3
TPS3803-01DCKR	SC70	DCK	5	3000	178.0	9.0	2.4	2.5	1.2	4.0	8.0	Q3
TPS3803G15DCKR	SC70	DCK	5	3000	180.0	8.4	2.41	2.41	1.2	4.0	8.0	Q3
TPS3805H33DCKR	SC70	DCK	5	3000	178.0	9.0	2.4	2.5	1.2	4.0	8.0	Q3
TPS3805H33DCKR	SC70	DCK	5	3000	180.0	8.4	2.41	2.41	1.2	4.0	8.0	Q3

TAPE AND REEL BOX DIMENSIONS

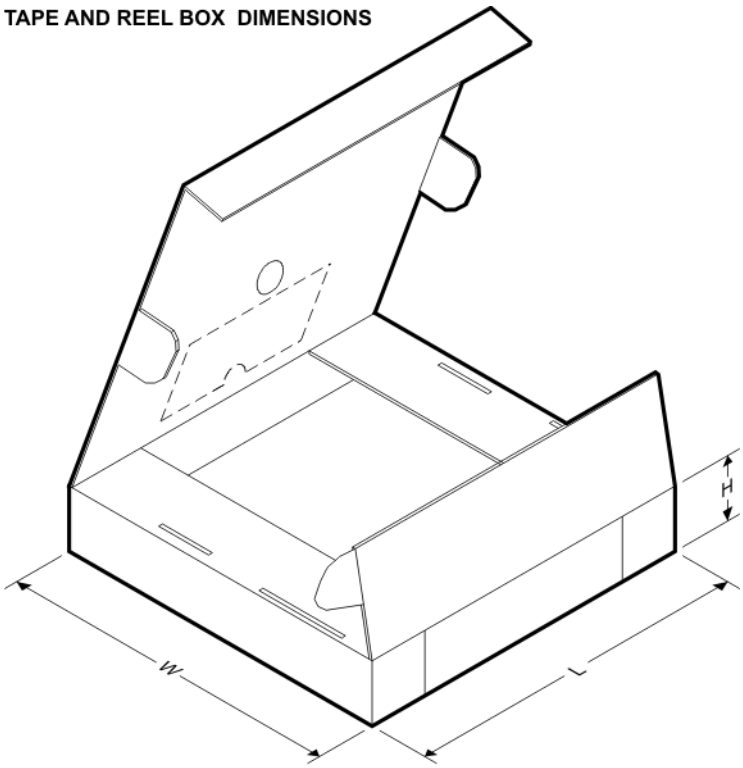

*All dimensions are nominal

Device	Package Type	Package Drawing	Pins	SPQ	Length (mm)	Width (mm)	Height (mm)
TPS3803-01DCKR	SC70	DCK	5	3000	183.0	183.0	20.0
TPS3803-01DCKR	SC70	DCK	5	3000	180.0	180.0	18.0
TPS3803G15DCKR	SC70	DCK	5	3000	183.0	183.0	20.0
TPS3805H33DCKR	SC70	DCK	5	3000	180.0	180.0	18.0
TPS3805H33DCKR	SC70	DCK	5	3000	183.0	183.0	20.0

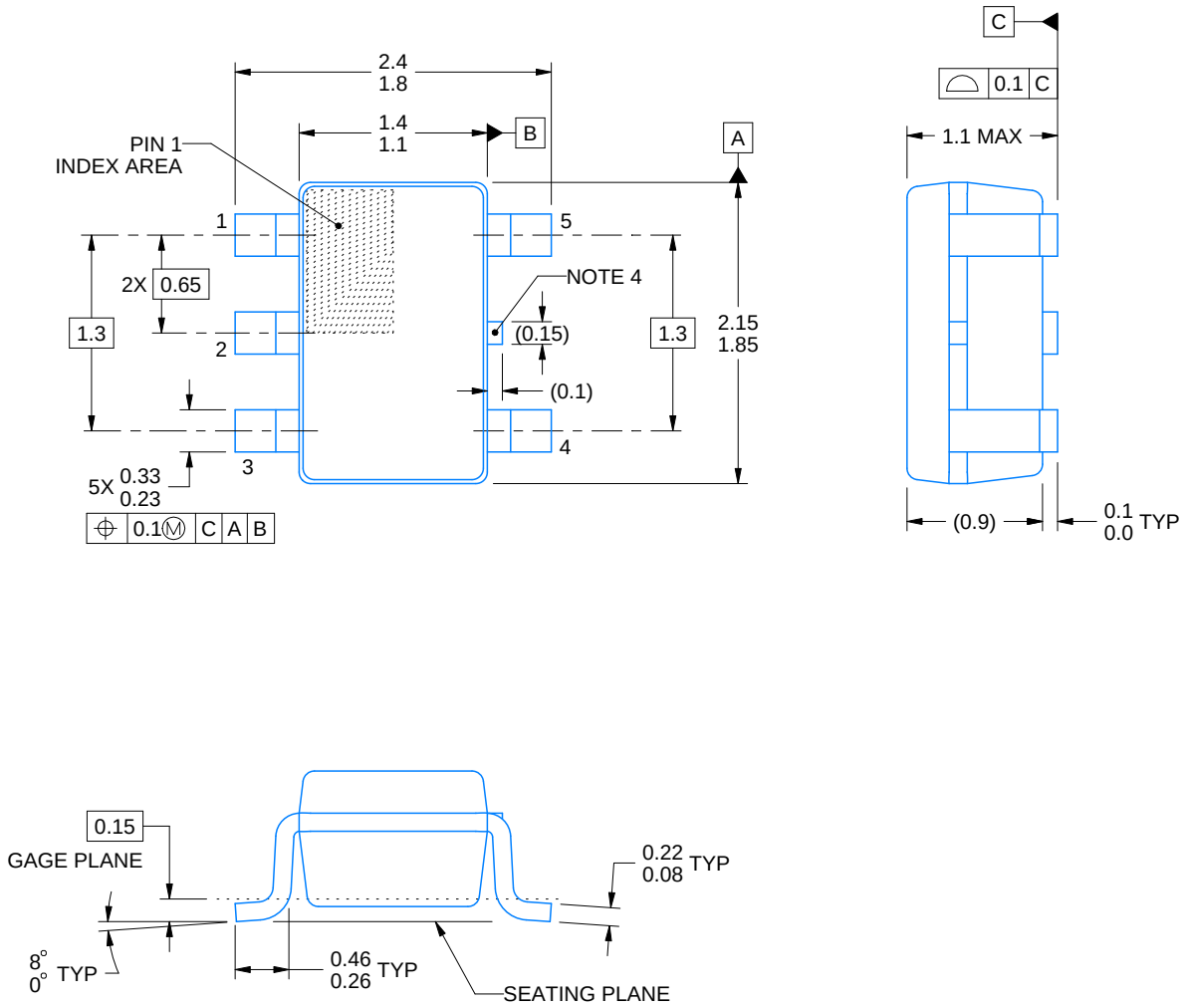

4214834/C 03/2023

NOTES:

1. All linear dimensions are in millimeters. Any dimensions in parenthesis are for reference only. Dimensioning and tolerancing per ASME Y14.5M.
2. This drawing is subject to change without notice.
3. Refernce JEDEC MO-203.
4. Support pin may differ or may not be present.

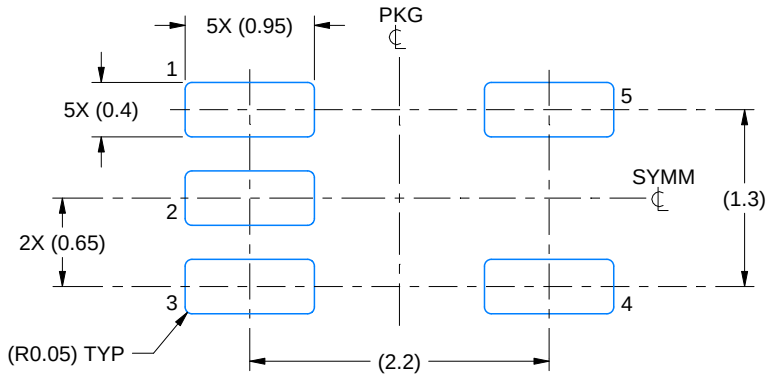

LAND PATTERN EXAMPLE
EXPOSED METAL SHOWN
SCALE:18X

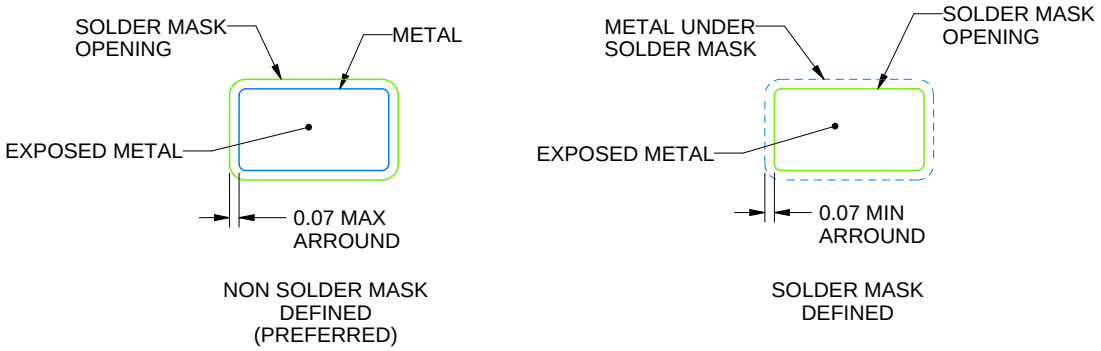

SOLDER MASK DETAILS

4214834/C 03/2023

NOTES: (continued)

4. Publication IPC-7351 may have alternate designs.
5. Solder mask tolerances between and around signal pads can vary based on board fabrication site.

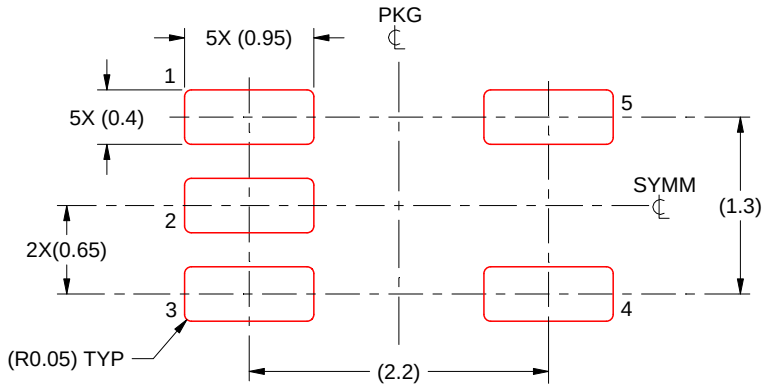

SOLDER PASTE EXAMPLE
BASED ON 0.125 THICK STENCIL
SCALE:18X

4214834/C 03/2023

NOTES: (continued)

6. Laser cutting apertures with trapezoidal walls and rounded corners may offer better paste release. IPC-7525 may have alternate design recommendations.
7. Board assembly site may have different recommendations for stencil design.

IMPORTANT NOTICE AND DISCLAIMER

TI PROVIDES TECHNICAL AND RELIABILITY DATA (INCLUDING DATA SHEETS), DESIGN RESOURCES (INCLUDING REFERENCE DESIGNS), APPLICATION OR OTHER DESIGN ADVICE, WEB TOOLS, SAFETY INFORMATION, AND OTHER RESOURCES “AS IS” AND WITH ALL FAULTS, AND DISCLAIMS ALL WARRANTIES, EXPRESS AND IMPLIED, INCLUDING WITHOUT LIMITATION ANY IMPLIED WARRANTIES OF MERCHANTABILITY, FITNESS FOR A PARTICULAR PURPOSE OR NON-INFRINGEMENT OF THIRD PARTY INTELLECTUAL PROPERTY RIGHTS.

These resources are intended for skilled developers designing with TI products. You are solely responsible for (1) selecting the appropriate TI products for your application, (2) designing, validating and testing your application, and (3) ensuring your application meets applicable standards, and any other safety, security, regulatory or other requirements.

These resources are subject to change without notice. TI grants you permission to use these resources only for development of an application that uses the TI products described in the resource. Other reproduction and display of these resources is prohibited. No license is granted to any other TI intellectual property right or to any third party intellectual property right. TI disclaims responsibility for, and you will fully indemnify TI and its representatives against, any claims, damages, costs, losses, and liabilities arising out of your use of these resources.

TI’s products are provided subject to TI’s Terms of Sale or other applicable terms available either on ti.com or provided in conjunction with such TI products. TI’s provision of these resources does not expand or otherwise alter TI’s applicable warranties or warranty disclaimers for TI products.

TI objects to and rejects any additional or different terms you may have proposed.

Mailing Address: Texas Instruments, Post Office Box 655303, Dallas, Texas 75265
Copyright © 2024, Texas Instruments Incorporated